Cambridge International AS & A Level

Cambridge International Examinations
Cambridge International Advanced Subsidiary and Advanced Level

CANDIDATE NAME	
CENTRE NUMBER	CANDIDATE NUMBER

5585930634

PHYSICS **9702/32**

Paper 3 Advanced Practical Skills 2 **May/June 2018**

2 hours

Candidates answer on the Question Paper.

Additional Materials: As listed in the Confidential Instructions.

READ THESE INSTRUCTIONS FIRST

Write your Centre number, candidate number and name on all the work you hand in.
Write in dark blue or black pen.
You may use an HB pencil for any diagrams or graphs.
Do not use staples, paper clips, glue or correction fluid.
DO **NOT** WRITE IN ANY BARCODES.

Answer **both** questions.
You will be allowed to work with the apparatus for a maximum of one hour for each question.
You are expected to record all your observations as soon as these observations are made, and to plan the presentation of the records so that it is not necessary to make a fair copy of them.
You are reminded of the need for good English and clear presentation in your answers.

Electronic calculators may be used.
You may lose marks if you do not show your working or if you do not use appropriate units.

Additional answer paper and graph paper should be used only if it becomes necessary to do so.

At the end of the examination, fasten all your work securely together.
The number of marks is given in brackets [ ] at the end of each question or part question.

For Examiner's Use	
1	
2	
Total	

This document consists of **12** printed pages.

© UCLES 2018

CAMBRIDGE International Examinations

You may not need to use all of the materials provided.

1 In this experiment, you will investigate the motion of a rolling sphere.

(a) (i) • Assemble the apparatus as shown in Fig. 1.1.

The top end of the track is a distance *d* above the bench.
The initial value of *d* should be approximately 5 cm.

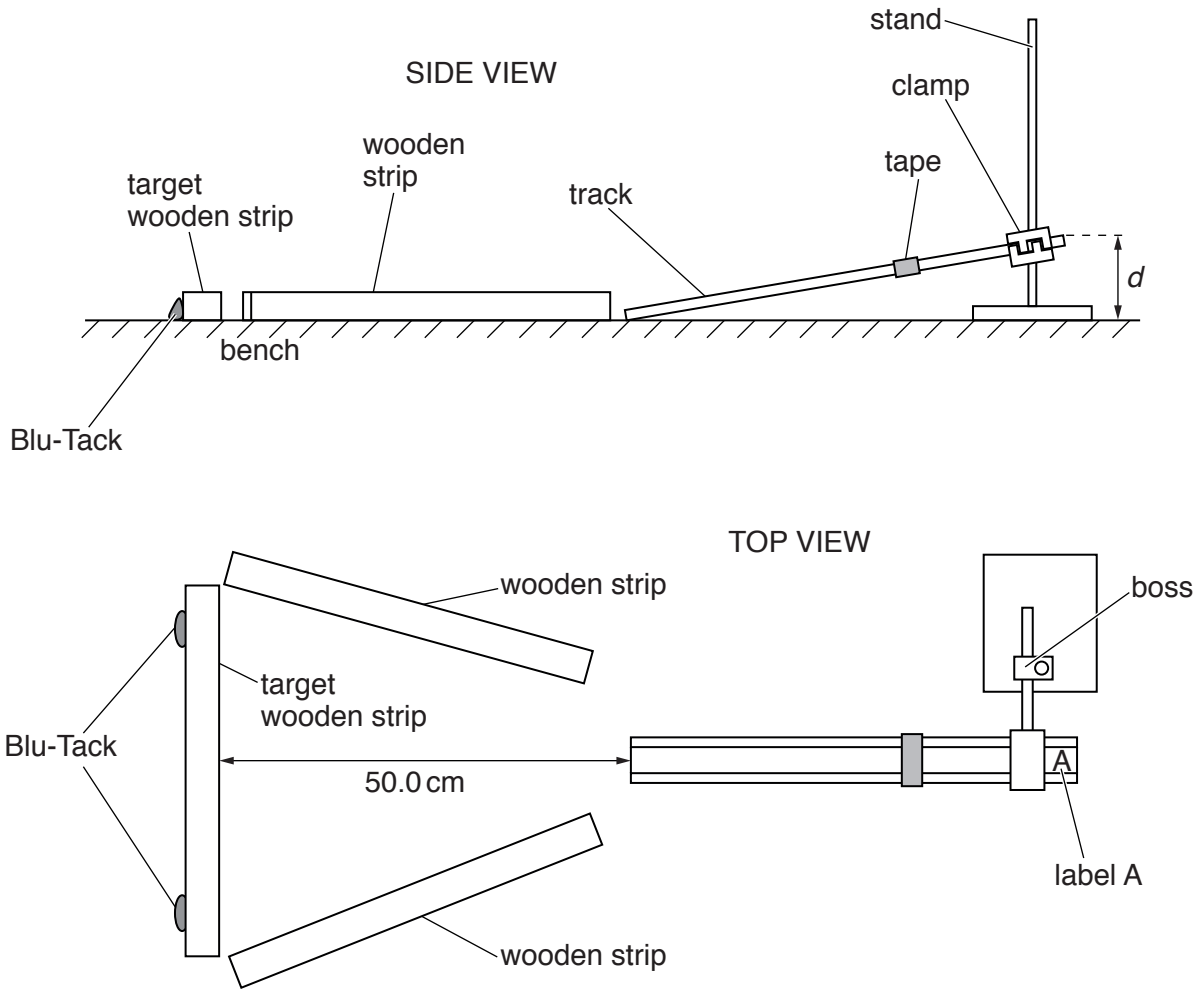

Fig. 1.1

• Ensure that the distance between the bottom of the track and the target wooden strip is 50.0 cm.

- Place the sphere on the track and hold it gently against the tape, as shown in Fig. 1.2.

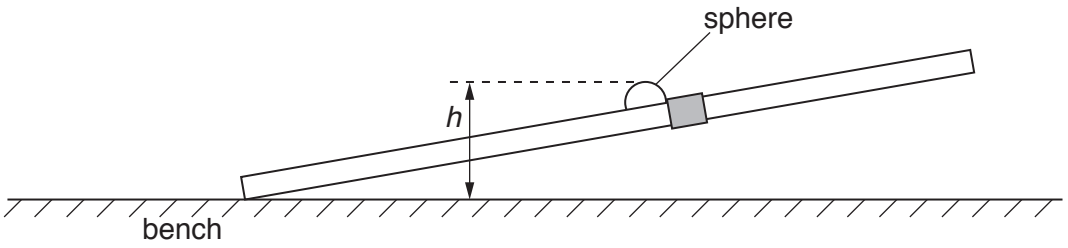

Fig. 1.2

- Measure and record the height h of the top of the sphere above the bench.

h = ... [1]

(ii)
- Release the sphere.
- Measure and record the time t from release for the sphere to reach the target.

t = ... [2]

© UCLES 2018

(b) Change d and repeat **(a)** until you have six sets of values of h and t. Do not use values of d greater than 10 cm.
Ensure that the distance from the bottom of the track to the target is **always 50.0 cm**.

Record your results in a table. Include values of $\frac{1}{t^2}$ in your table.

[9]

(c) **(i)** Plot a graph of $\frac{1}{t^2}$ on the y-axis against h on the x-axis. [3]

(ii) Draw the straight line of best fit. [1]

(iii) Determine the gradient and y-intercept of this line.

gradient = ...

y-intercept = ...
[2]

© UCLES 2018

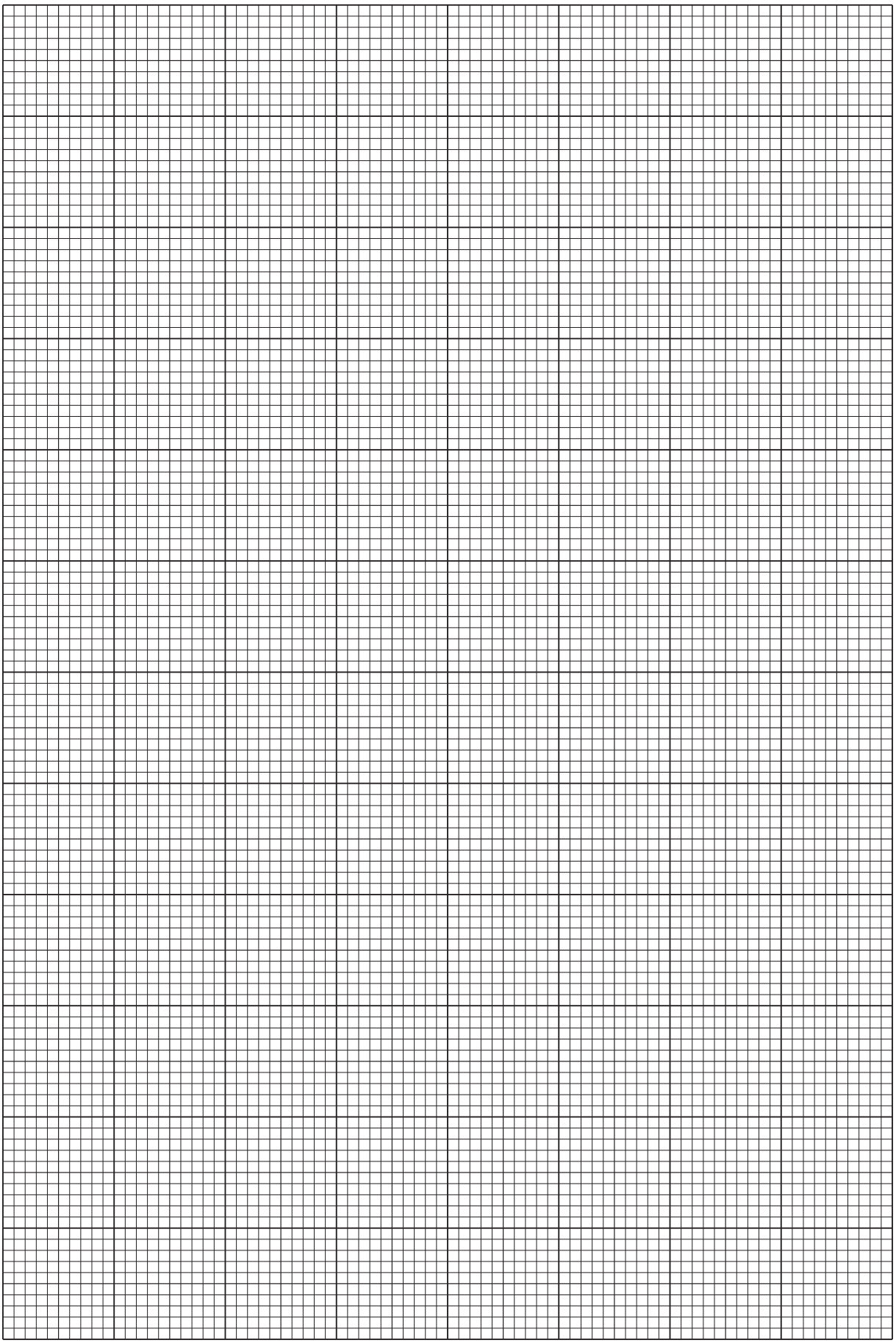

© UCLES 2018

(d) It is suggested that the quantities t and h are related by the equation

$$\frac{1}{t^2} = ah + b$$

where a and b are constants.

Use your answers in **(c)(iii)** to determine the values of a and b.
Give appropriate units.

a = ...

b = ...
[2]

[Total: 20]

© UCLES 2018

You may not need to use all of the materials provided.

2 In this experiment, you will investigate stationary wave patterns.

(a) You are provided with two pieces of string of different diameters.
Each piece of string has a 10 g mass attached to one end.
Using the **thinner** string, assemble the apparatus as shown in Fig. 2.1.

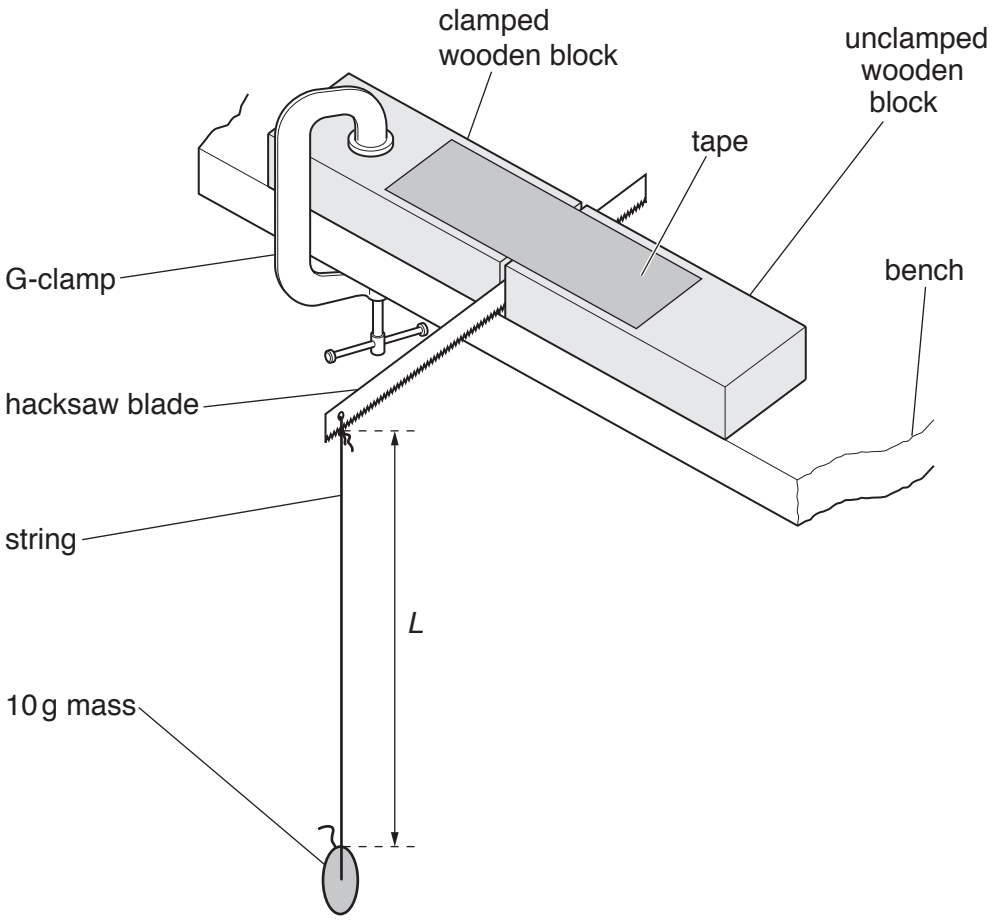

Fig. 2.1

The length of string between the hacksaw blade and the 10 g mass is *L*, as shown in Fig. 2.1.

Measure and record *L*.

L = ... [1]

(b) The length of hacksaw blade outside the blocks is *x*, as shown in Fig. 2.2.

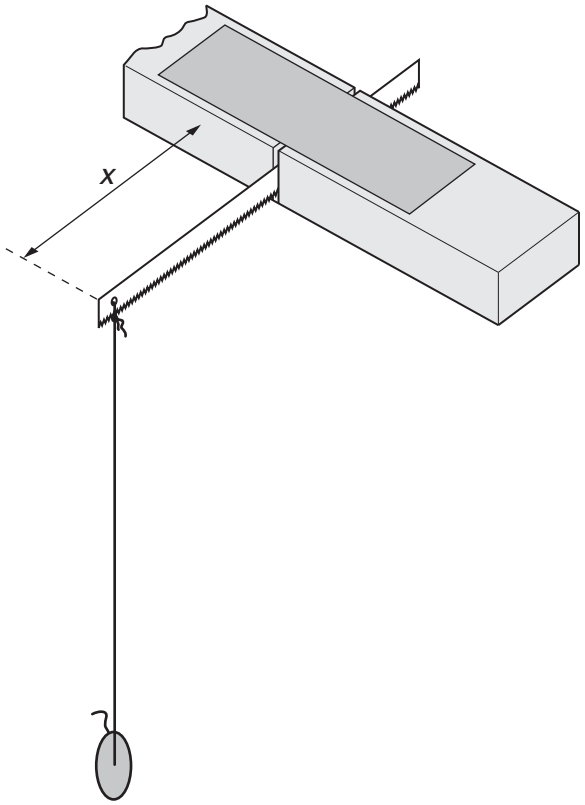

Fig. 2.2

When the end of the hacksaw blade is moved a small distance to one side and released, the string vibrates.

For certain values of *x*, the string vibrates in stationary wave patterns.
Examples of these patterns are shown in Fig. 2.3.

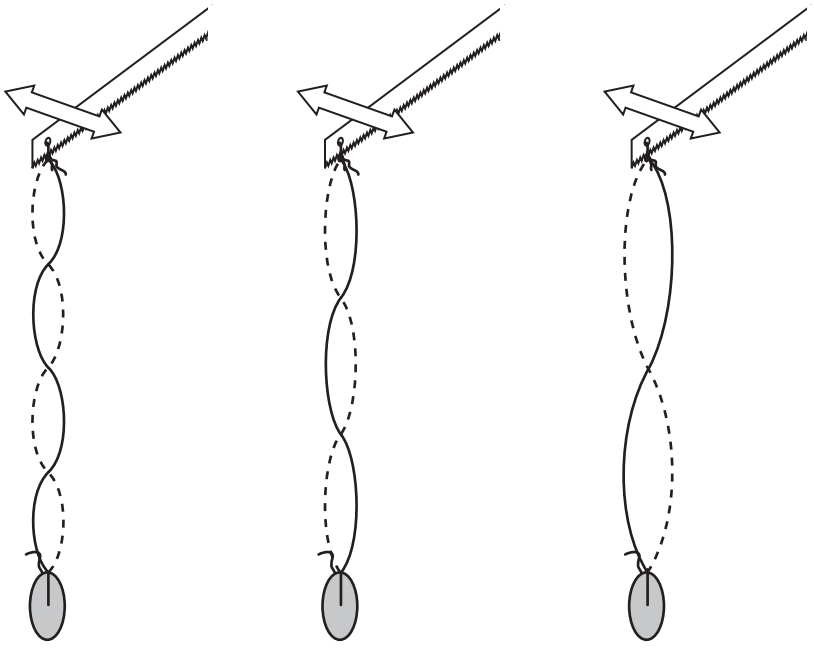

Fig. 2.3

© UCLES 2018

- Press down on the unclamped wooden block.
- Move the end of the hacksaw blade a small distance to one side and release it.
- Change x in small steps. Keep changing x, testing for a pattern at each step, **until the pattern B with three loops is clearly produced**.
- Measure and record x.

x = ... [2]

(c) Estimate the percentage uncertainty in your value of x.

percentage uncertainty = ... [1]

(d) Calculate the value of λ in metres, using $\lambda = \frac{2L}{3}$.

λ = ... m [1]

(e) Justify the number of significant figures you have given for your value of λ.

.....

.....

.....[1]

© UCLES 2018

(f) You are provided with a card stating the mass per unit length μ of the string.

- Record the value of μ from the card.

μ = ... kg m^{-1}

- Calculate the frequency f of the vibrations, using

$$f = \frac{1}{\lambda}\sqrt{\left(\frac{mg}{\mu}\right)}$$

where $m = 0.010$ kg and $g = 9.81$ m s^{-2}.

f = ... Hz [1]

(g) Repeat **(a)**, **(b)**, **(d)** and **(f)** using the **thicker** string.

L = ...

x = ...

λ = ... m

μ = ... kg m^{-1}

f = ... Hz
[3]

© UCLES 2018

(h) It is suggested that the relationship between f and x is

$$f = \frac{k}{x^2}$$

where k is a constant.

(i) Using your data, calculate two values of k.

first value of k = ...

second value of k = ...
[1]

(ii) Explain whether your results support the suggested relationship.

.....

.....

.....[1]

(i) **(i)** Describe four sources of uncertainty or limitations of the procedure for this experiment.

1. .....

.....

2. .....

.....

3. .....

.....

4. .....

.....

[4]

(ii) Describe four improvements that could be made to this experiment. You may suggest the use of other apparatus or different procedures.

1. .....

.....

2. .....

.....

3. .....

.....

4. .....

.....

[4]

[Total: 20]

Permission to reproduce items where third-party owned material protected by copyright is included has been sought and cleared where possible. Every reasonable effort has been made by the publisher (UCLES) to trace copyright holders, but if any items requiring clearance have unwittingly been included, the publisher will be pleased to make amends at the earliest possible opportunity.

To avoid the issue of disclosure of answer-related information to candidates, all copyright acknowledgements are reproduced online in the Cambridge International Examinations Copyright Acknowledgements Booklet. This is produced for each series of examinations and is freely available to download at www.cie.org.uk after the live examination series.

Cambridge International Examinations is part of the Cambridge Assessment Group. Cambridge Assessment is the brand name of University of Cambridge Local Examinations Syndicate (UCLES), which is itself a department of the University of Cambridge.